ITEM NO.	PART NUMBER	DESCRIPTION	QTY.
1	8197312	Wire, T-630 JD4045T 21 Pin ECU	1
2	E153	Terminal Vi Spade 10 Stud 10-12	4
3	E122	Terminal Vi Spade (8-st) 22-16	10
4	E785	Loom Wire 3/4	1
5	80575-114	Ladd Strain Relief Shell Size 24	1
6	TY-570	Tie Wrap	1
7	80575-100	Plastic Plug, 21 Pin	1
8	80575-104	Plug, Sealing Size 12-16	9
9	832-34RHMS	Screw Rh Mach. 8-32x 3/4	1
10	832SLN	Nut Self-lock 8-32	1
11	80575-102	Socket, Stamped & Forged # 12	3
12	80575-103	Socket, Stamped & Forged # 16-18	9

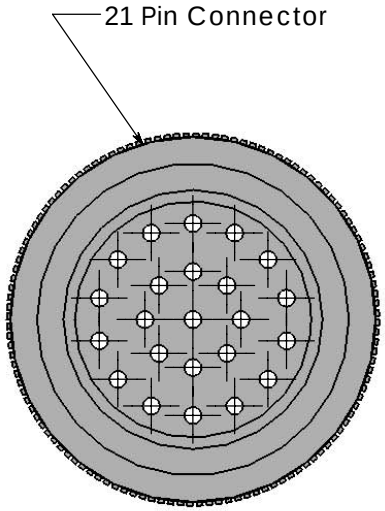

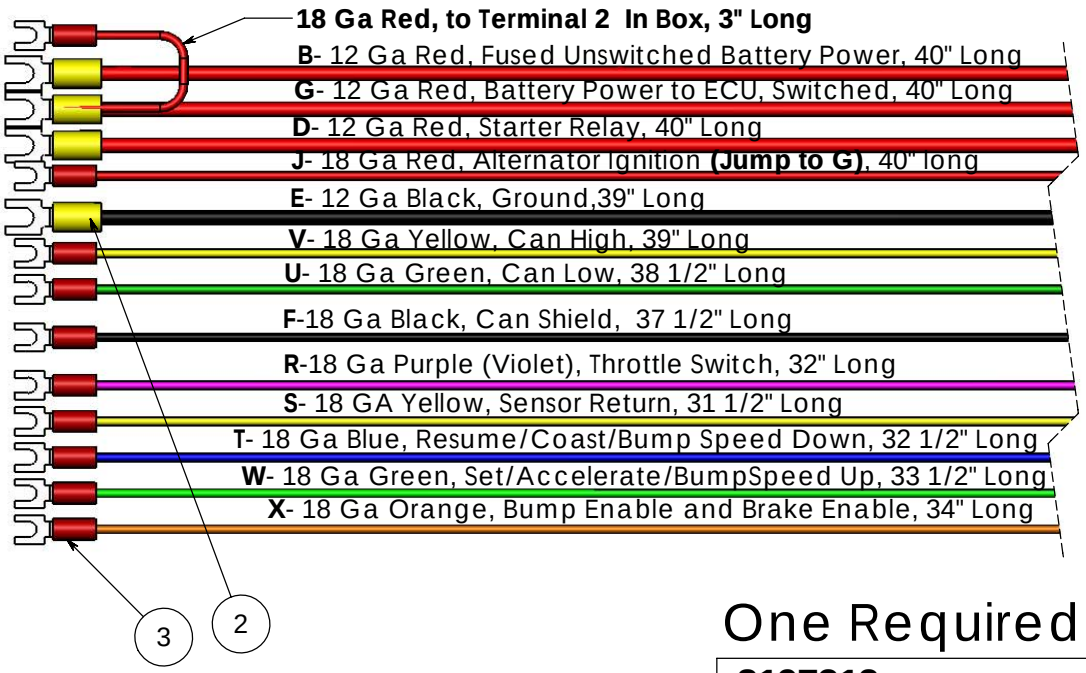

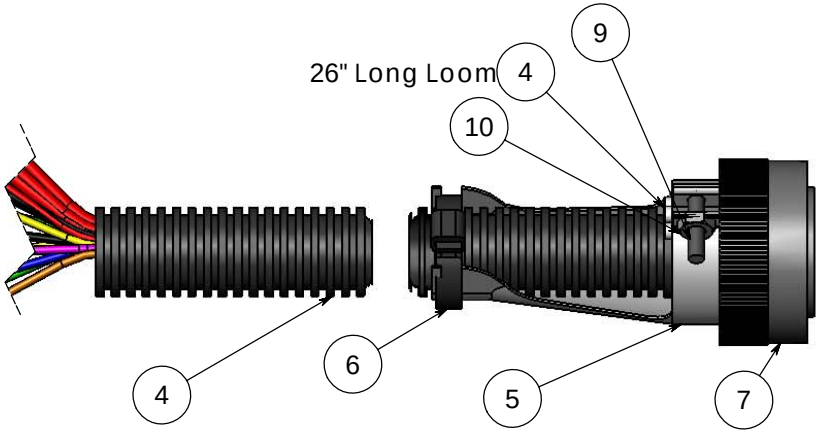

One Required Per Unit

8197312		DR. BY few
T-630		DATE 5/4/2006
MACHINE & STEEL SERVICE INC. P.O. BOX 492810 LEESBURG, FLA. 34749-2810	Wire, T-630 JD4045T 21 Pin ECU	SCALE: HALF
		8197312